# MTD2A Timing synchronization and cadence principles - may 2026

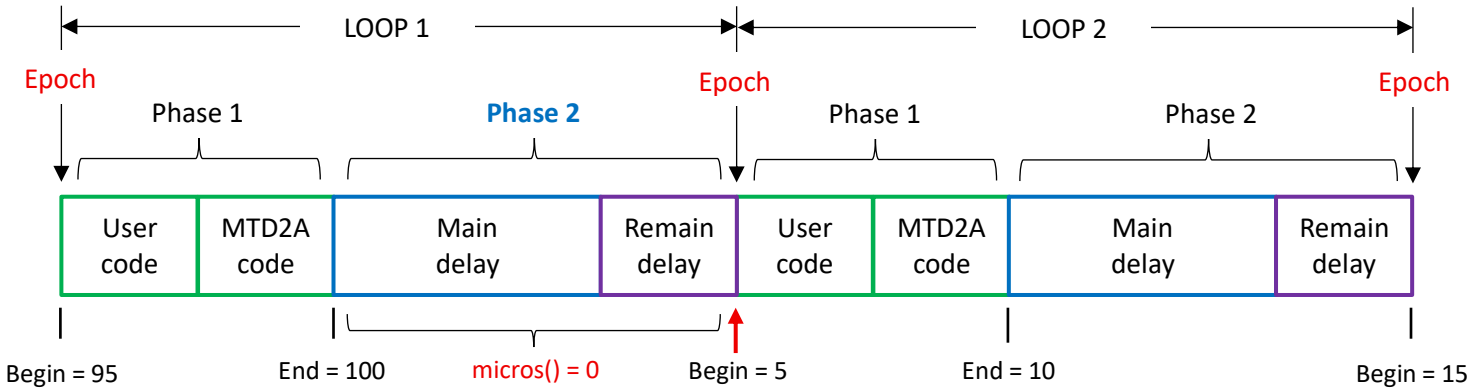


loop_handle_micros_overflow()
**SCENARIO 1**

LastEnd > End => 100 > 10
Begin > End => 5 > 10
micros() = 0 Phase 2 [LOOP 1]
Epoch = begin [LOOP 2]
Epoch = 5

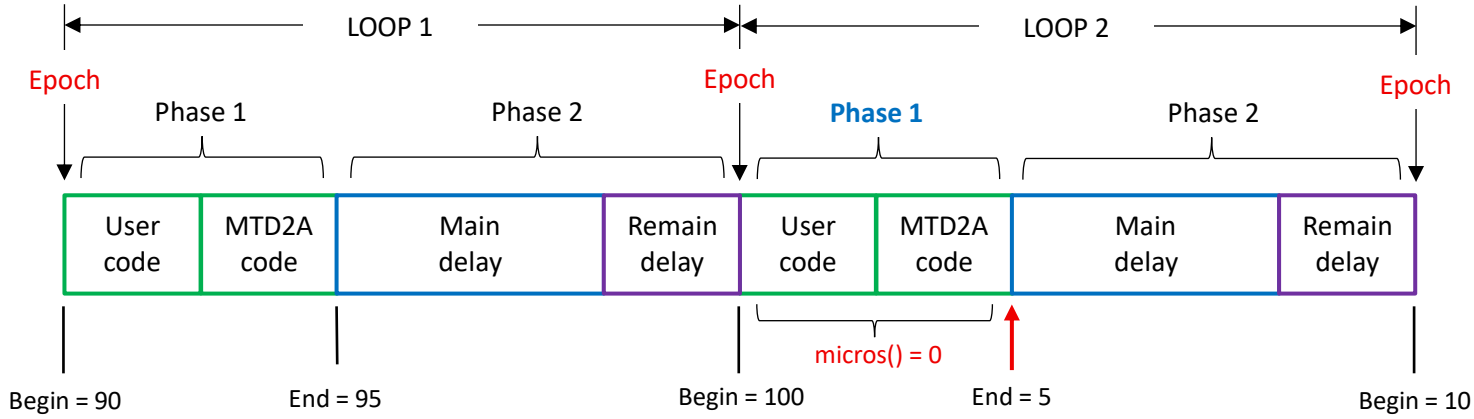


loop_handle_micros_overflow()
**SCENARIO 2**

LastEnd > End => 95 > 5
Begin > End => 100 > 5
micros() = 0 Phase 1 [LOOP 2]
Epoch = - 0x100000000LL - begin [LOOP 2]
Epoch = - {0 – 5}

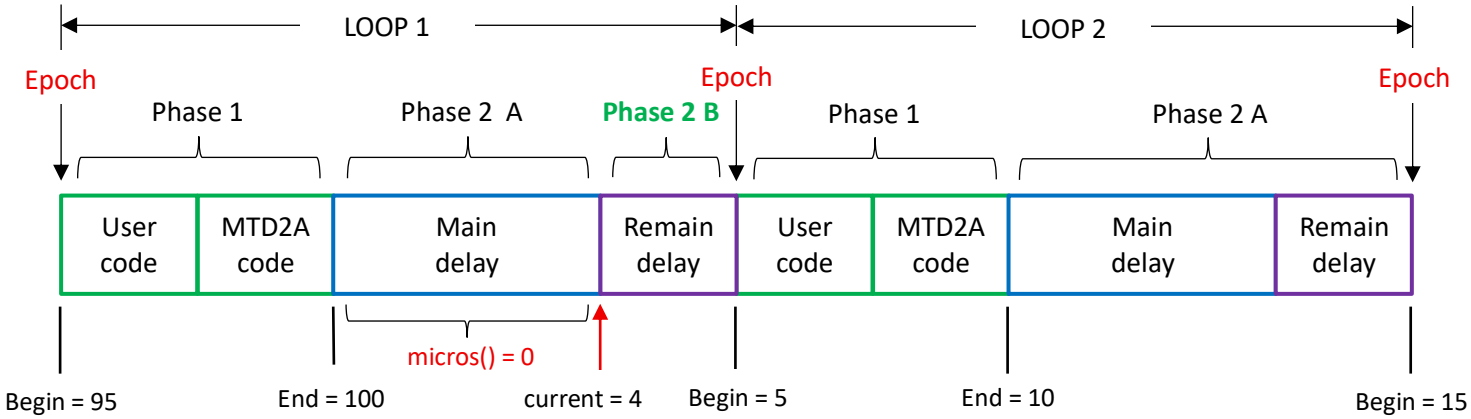


loop_target_timed_delay()
**SCENARIO**

Current > end => 4 > 100
Overrun = current + MaxTime
Overrun = 4 + 100 = 105
Correction = target – overrun
Correctrion = 105 – 104 = 1